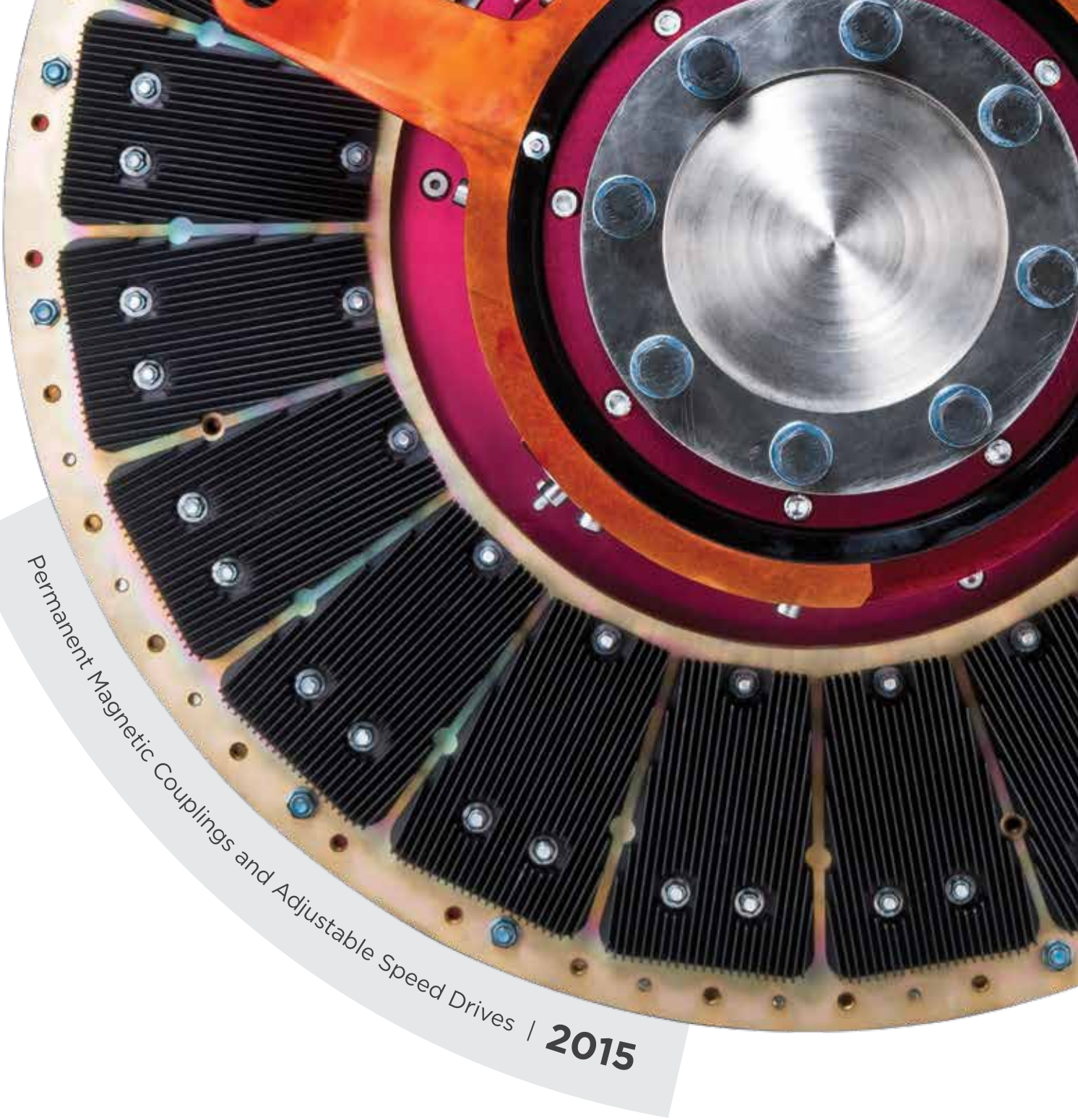

Permanent Magnetic Couplings and Adjustable Speed Drives | 2015

MagnaDrive™ CORPORATION

Minimized Maintenance | Unmatched Reliability | A Lifetime of Energy Savings

Magnadrive Product Range / Index

PRODUCT	PAGE	TECH SPECS	BENEFITS OF EVERY PRODUCT	SPECIAL FEATURES	APPLICATIONS
VORTEX™	9	Up to 55 kW Up to 3000 rpm*	• Easy installation • Virtually no maintenance • Up to 98% efficient • Saves up to 70% of energy costs • No fluids, oils or chemicals • Constructed from corrosive resistant materials, coatings and durable electroplating • Reliable in demanding and dirty environments; indoors or out • No physical connection between motor and load • Designed to withstand air temperatures from -40° C to 65° C • Cushioned motor start reducing system mechanical stresses • "Slips through" temporary overload conditions • Cushions shock-loadings • Increases bearing and seal life • Tolerant of misalignment • Allows for thermal expansion • No EMI to affect electronics • Vortex, FGC, MGD & MGTL are suitable for both constant and variable torque applications. *(ASD is suitable for variable torque applications only)* • Ideal for tight space constraints • Rapid return on investment • Low total cost of ownership	• Simple design and construction • 20+ years of maintenance free operation • Meets ANSI B73 and API 610 Standards	Centrifugal Pumps, Fans & Blowers
FGC™ FIXED GAP COUPLING	13	2-2500 kW Up to 3000 rpm*		• Adjustable Air Gap spacers • Tolerant of misalignment • Substantial Energy Savings on variable torque pump and fan applications	Ideal for High Inertia Systems: • Conveyor Belts, Bucket Elevators and Other Bulk Handling Equipment • Pumps • Compressors • Air Pre-heaters • Fans and Blowers • Chippers and Shredders • Pulpers and Re-Pulpers • Crushers and Hammermills • Many More
MGD™ MAGNAGUARD DELAY COUPLING	17	16-625 kW Up to 3000 rpm*		• Dual magnet rotors that auto-matically move further reducing torque at motor startup • Air Gap increases during start and operation providing additional shock load cushioning	
MGTL™ TORQUE-LIMITING COUPLING	21	30-625 kW Up to 3000 rpm*		• Preset peak torque disconnects motor from load during load seizures or jams • Protects valuable system components from damage	
ASD™ ADJUSTABLE SPEED DRIVES	25	15-2500 kW Up to 3000 rpm*		• Variable speed control • Completely disengaged motor start-up • Lowest total cost of ownership • Substantial energy savings	Centrifugal Pumps, Fans & Blowers
TECHNICAL DATA	31	See Technical Data Section for detailed product specs			

** Depending on Specific Model*

In 1999, MagnaDrive™ introduced a world-changing industrial technology—a technology that saves energy, reduces operation & maintenance costs and improves system reliability.

REVOLUTIONARY POWER TRANSFER

MagnaDrive replaces the physical connection between a motor and a load with a gap of air. The interaction between permanent magnets and non-ferrous conductors smoothly transmits torque across the Air Gap from motor to load and sets the load spinning. The smaller the gap, the greater the torque. This Air Gap is the cornerstone of MagnaDrive's technology.

You can try it. Run a magnet over a copper disc in a circular motion, leaving a small gap between the two. The interaction between the magnet and the copper creates a flux field that sets the disc spinning. The closer you move the magnet, the stronger the force becomes and the easier the disc spins. Mechanical friction is an artifact of the past.

By adjusting the Air Gap, number and strength of the magnets, MagnaDrive manufactures a variety of couplings and adjustable speed drives with capabilities that define the industry standard.

*Check out our Magnets & Copper demonstration**

** Download a QBR Code Reader from the App store on your phone*

RARE EARTH REVOLUTIONS

With a half-life of over 2000 years, and the capability to withstand temperatures up to 176° C, the rare earth magnets used in MagnaDrive technology are rugged and powerful. Made of Neodymium-Iron-Boron (NdFeB), these permanent magnets are also compact and light, permitting the small size and high torque transmission capability of MagnaDrive products.

FIELD NOTE

MagnaDrive is the world leader in permanent magnet torque transfer.

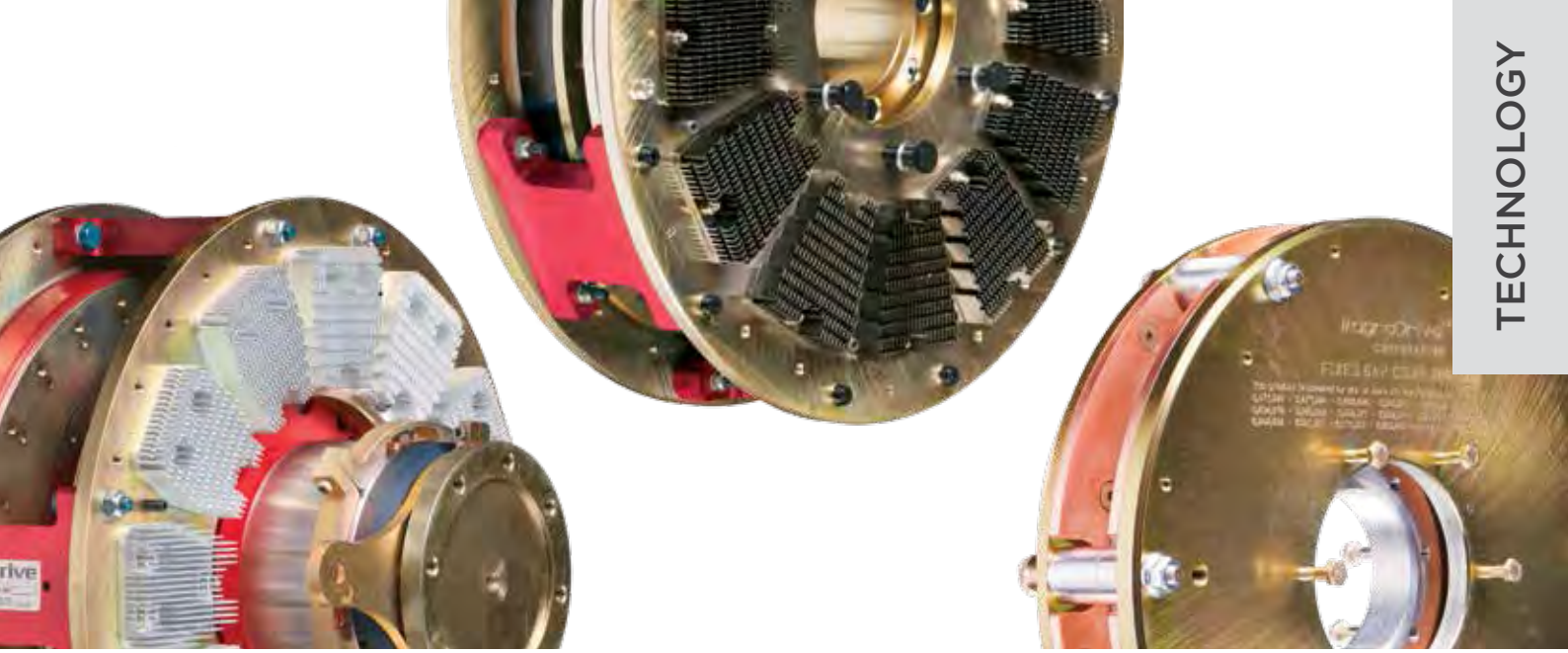

THE DISCONNECTED CONNECTION

In the construction of MagnaDrive couplings (VTX, FGC, MGD, MGTL) and adjustable speed drives (ASD), non-ferrous metal conductor rotors **(2)** are attached to the motor, while rotors populated with rare earth magnets **(1)** are attached to the load. These two components never touch, creating the Air Gap **(3)**. The magnetic flux created between the magnet rotor and the conductor rotors generates torque, and transmits power safely and efficiently to the load.

Two hubs **(4)** are connected to the motor and load shafts with a keyless, compression style locking device called a shrink disc (excluding VTX), offering an extremely balanced, durable connection. In addition to all of the components above, the Adjustable Speed Drive from MagnaDrive also includes an actuator mechanism **(5)** to automatically adjust the Air Gap spacing between the conductor rotor and the magnet rotor, allowing variable torque transfer, which results in precise, automated speed control on centrifugal applications.

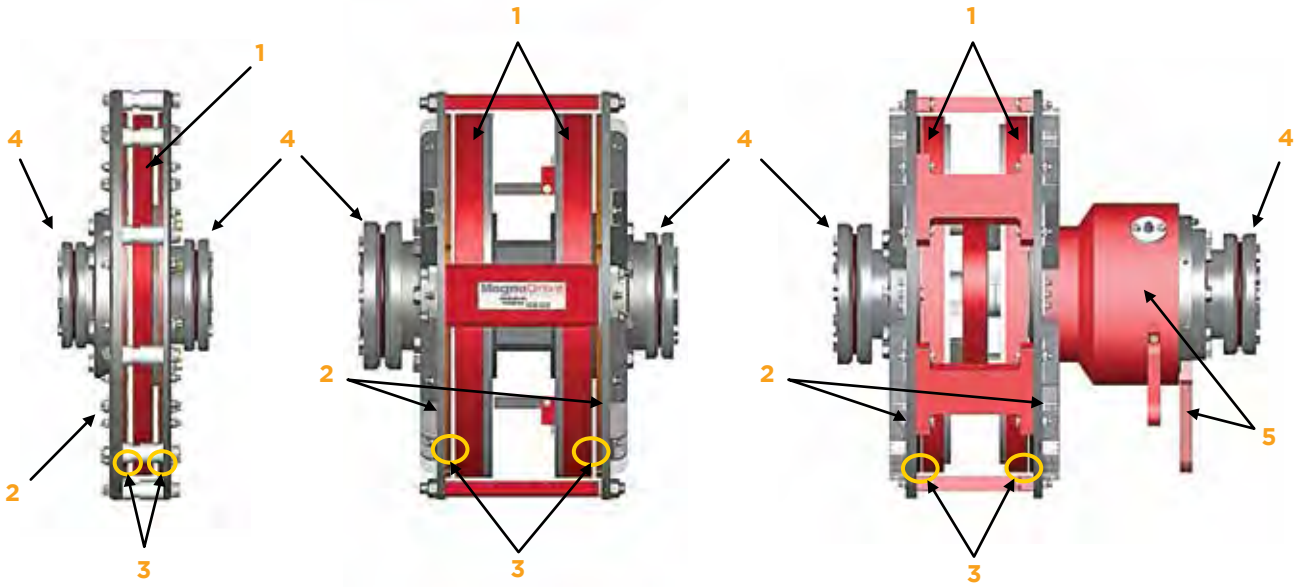

VTX/FGC MGD/MGTL ASD

Magnadrive = The Lowest Total Cost of Ownership

	VALVES & DAMPERS	MECHANICAL COUPLINGS (Rigid, Flexible, Disk, Gear, Grid, Etc)	FLUID COUPLINGS & DRIVES	VARIABLE SPEED DRIVES (VFDs / Eddy Current)	MagnaDrive COUPLINGS & ADJUSTABLE SPEED DRIVES
Motor & Load Connection	Directly coupled, causing vibration transfer and misalignment problems, as well as energy inefficiency				NO physical connection Torque is transferred across the Air Gap
Life Of Bearings, Seals & Other Equipment	Decreased equipment life due to vibration and misalignment issues (often severe)				INCREASED equipment life NO vibration transfer
Installation & Special Requirements	Requires extensive laser alignment of motor and load equipment		Requires extensive laser alignment Extra labor, install time and oil level set-up Oil disposal & contamination issues	VFDs require extensive infrastructure Eddy Current Drives are heavy & bulky, requiring extra infrastructure	Tolerant of misalignment Low infrastructure SIMPLE mechanical installation No grease points on Vortex, FGC, MGD, or MGTL
Operation & Maintenance	Multiple failure points Very high maintenance Expensive spare parts Cavitation, vibration & flashing No overload protection	Very high maintenance Expensive spare parts Continuous realignment necessary No overload protection	Very high maintenance Expensive spare parts Uses hazardous materials Environmental contamination & disposal issues	Harmonics & electronic system interference Environmental contamination & disposal issues No mechanical overload protection	Efficient torque transfer Simple to operate & maintain Reduced maintenance NO harmonics Rapid restart
System Efficiency & Energy Savings	Energy is wasted due to restricted flow & additional load on the motor	Loss of efficiency is common from extra drag on equipment & misalignment	Low efficiency due to misalignment, and frictional losses between impeller & rotor, and between the oil & housing walls	VFDs have dramatic efficiency losses with misalignment, and from filters, transformers, cooling systems & other cooling equipment Eddy Current Drives need extra power to energize the electromagnet	98% EFFICIENT Up to 70% energy savings No energy losses for ancillary equipment Fine-tuned Air Gap for desired process performance

REAL WORLD BENEFITS

MINIMIZED MAINTENANCE

Studies show that over 80% of all rotary equipment failures are related to vibration. MagnaDrive's patented Air Gap Technology tolerates significantly more misalignment than traditional couplings and eliminates vibration transfer between shafts.

In today's modern work environments, Electromagnetic Interference (EMI) can be a big source of frustration. MagnaDrive couplings actually emit less EMI than the associated motor, protecting your critical equipment from electrical damage. Costly repairs no longer stand between you and your bottom line.

UNMATCHED RELIABILITY

Unlike traditional full-contact couplings, MagnaDrive's magnet rotor and conductor rotor are never in contact with each other. That means no grease points, no connection to wear out and a significantly longer life for bearings, seals and other equipment. Steadfast in conditions ranging from -40° C to 65° C, MagnaDrive's patented technology is constructed from corrosive resistant materials, coatings, and durable electroplating allowing them to be installed indoors or outdoors. You can count on a twenty-plus-year operating life and dependability the whole way through.

A LIFETIME OF ENERGY SAVINGS

MagnaDrive saves energy. Our couplings and adjustable speed drives are approximately 98% efficient with no additional energy loss from ancillary equipment. The Air Gap eliminates friction and provides cushioned starts that reduce in-rush current demand, saving energy where it is used the most—for the entire lifetime of your product.

Oversized equipment? The ASD is your top-of-the-line choice. MagnaDrive technology can be custom-tailored to maximize efficiency and meet your exact performance demands. Couplings can be fine-tuned whenever you wish to provide impeccable process control.

Need hard facts? Early funding for MagnaDrive was supplied by a grant from the US Department of Energy (DOE). DOE Testing demonstrated that MagnaDrive products reduce energy usage by up to 70% over the course of a product's lifetime, compared to traditional couplings.

For more detailed energy saving information, check out **Success From the Field** stories under each product section.

FIELD NOTE

The US Department of Energy operates MagnaDrive units in a number of mission critical applications at power facilities across the United States.

SIMPLE SOLUTION, REVOLUTIONARY RESULTS

Benefits you can expect from every MagnaDrive product:

- Easy installation
- Virtually no maintenance
- Up to 98% efficient
- Saves up to 70% of energy costs
- No fluids, oils or chemicals
- Constructed from corrosive resistant materials, coatings, and durable electroplating
- Reliable in demanding and dirty environments; indoors or out
- Eliminates vibration from misalignment
- Air Gap in the coupling eliminates the mechanical connection between the motor and load reducing the wear and tear on equipment
- Designed to withstand air temperatures from -40°C to 65°C
- Cushioned motor start reducing system mechanical stresses
- "Slips through" temporary overload conditions
- Cushions shock-loadings
- Increases bearing and seal life
- Tolerant of misalignment
- Allows for thermal expansion
- No EMI to affect electronics
- Suitable for both constant and variable torque applications
- Ideal for tight space constraints
- Rapid return on investment
- Low total cost of ownership

BENEFITING INDUSTRY WORLDWIDE

CEMENT

CHEMICAL PROCESSING

HVAC

IRRIGATION

MANUFACTURING

MARITIME

MILITARY

MINING

OIL & GAS

POWER GENERATION

PULP & PAPER

WATER

WASTEWATER

MANY MORE

Are you ready to save on operating costs and cut your energy usage by up to 70%?

Switch to a system that is proven to protect your critical equipment. The revolution is ready. The time to innovate is now. Call MagnaDrive today at **+1 (425) 463-4700** for a complete system evaluation, including a personal site visit and projected energy savings based on your current equipment set-up.

MagnaDrive™ CORPORATION

VORTEX

Up to 55 kW

YOUR SOLUTION FOR

Vibration
Periodic Load Seizure
Pulsating Loads
Thermal Expansion
Shock Loading
Tight Space Constraints

VORTEX™
SMALL SIZE, BIG RESULTS

We know that even small power applications demand big reliability. Vortex™ from MagnaDrive™ is designed for the Sub-55 kW market. Vortex is constructed from the same high quality materials as the rest of the MagnaDrive product family. With its streamlined design and lightweight construction, Vortex will give your small pump, fan, or blower a lifetime of reliable, energy-saving and maintenance-free performance.

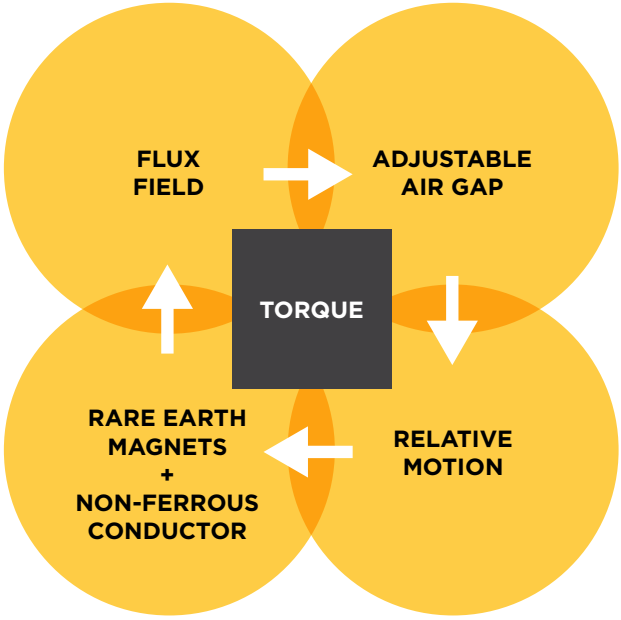

MAGNADRIVE'S DISCONNECTED TORQUE-TRANSFER TECHNOLOGY

Check out a video of our technology in motion.

HIGHLIGHTS

Vortex from MagnaDrive has all of the benefits of MagnaDrive technology, plus:

- Compact and Light Weight
- Up to 55 kW
- Up to 3000 rpm Operation
- Simple Design and Construction
- 20+ Years of Maintenance Free Operation
- Meets ANSI B73 and API 610 Standards

VTX-03

APPLICATIONS

Vortex from MagnaDrive is ideal for centrifugal HVAC applications up to 55 kW:

- Heating Pumps, Fans and Blowers
- Air Conditioning Pumps, Fans and Blowers
- Ventilation Pumps, Fans and Blowers

TECH-SPECS

See Technical Data on page 33

SUCCESS FROM THE FIELD / *HVAC*

"...Replacing the flexible couplings with MagnaDrive Vortex not only resulted in significant savings in the avoided maintenance costs but also saved us energy." - HVAC Contractor

SITUATION

Due to severe vibration and misalignment problems, the customer was replacing flexible couplings on their 3 kW, 1500 rpm Hot Glycol Return Pump Systems 3 to 4 times per year. In addition, the couplings were experiencing critical thermal growth issues and produced an above average amount of noise.

SOLUTION

Vortex™ from MagnaDrive™

SAVINGS

Before and after electrical system tests showed immediate reduced motor amperage and temperature upon installation. Total average power usage decreased by 20%. Infrared scans showed the temperature dropped by approximately 2°C, bringing the temperature out of critical range. In addition, sound levels decreased by approximately 30%.

Annual Savings Per Coupling, In Energy: **20%**

SUCCESS

Even without taking into account the significant savings from reduced downtime and minimized maintenance, MagnaDrive couplings in this application paid for themselves in less than 9 months.

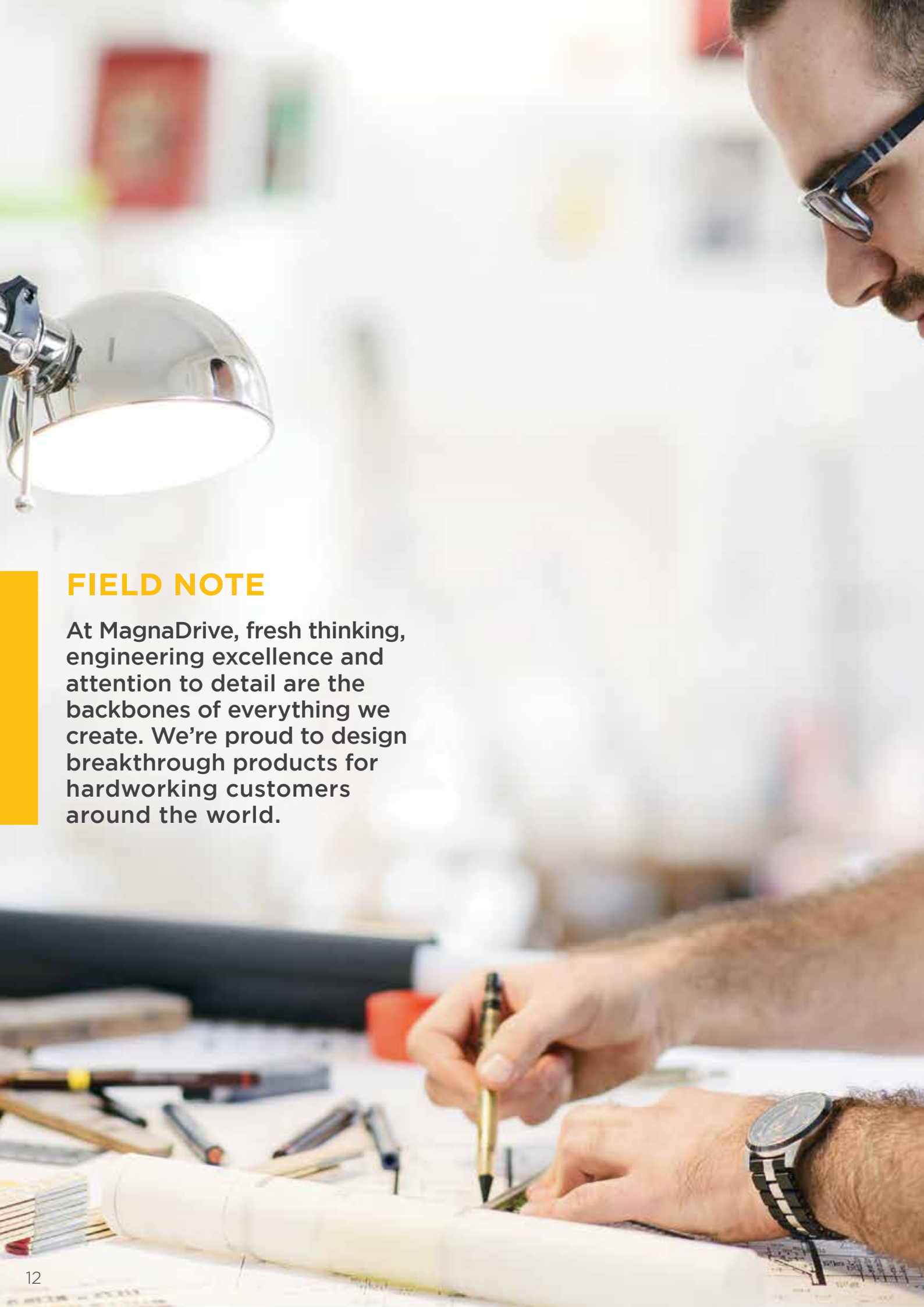

FIELD NOTE

At MagnaDrive, fresh thinking, engineering excellence and attention to detail are the backbones of everything we create. We're proud to design breakthrough products for hardworking customers around the world.

FIXED GAP COUPLING™ (FGC)

2 - 2500 kW

YOUR SOLUTION FOR

Vibration
Periodic Load Seizure
Pulsating Loads
Thermal Expansion
Shock Loading
Tight Space Constraints
Fluid Coupling Problems

FGC™

CUSHIONED START, CONCRETE SAVINGS

High inertia loads require rugged reliability. Engineered for up to 2500 kW applications, the Fixed Gap Coupling™ from MagnaDrive™ has no moving parts and forgives misalignment, saving your critical equipment from vibration due to misalignment. When starting a motor, FGC delays the application of torque to the load, resulting in a cushioned startup—significantly increasing the life of your systems. Ready to save energy too? Select the FGC E-Max™ with a greater degree of slip to intentionally slow the load speed–typical on variable torque centrifugal pumps and fans-or select an FGC with minimal slip for constant torque applications such as conveyors and crushers.

FGC 29.0S

FINE-TUNED FOR YOU

Torque rating can be fine-tuned to your application requirements by easy adjustment of the Air Gap before purchase. Should your application requirement change, the Air Gap can be adjusted in the field.

HIGHLIGHTS

FGC from MagnaDrive has all of the benefits of MagnaDrive technology, plus:

- Ideal for High Inertia Systems
- 2 - 2500 kW
- Up to 3000 rpm Operation
- Adjustable Air Gap Spacers for Fine-Tuned Torque
- Customizable to Fit Virtually Any Space Requirement
- Tolerates Misalignment
- Up to 30% Energy Savings on Variable Torque Pump and Fan Applications

APPLICATIONS

- Conveyor Belts, Bucket Elevators and Other Bulk Handling Equipment
- Pumps
- Compressors
- Air Pre-heaters
- Fans and Blowers
- Chippers and Shredders
- Pulpers and Re-Pulpers
- Crushers and Hammermills
- Mixers
- Many More

TECH-SPECS

See Technical Data on Page 32

INTRODUCING E-Max™, YOUR CONSERVATION SOLUTION

The newest member of the FGC coupling family, E-Max offers all of the benefits of the FGC, but also **reduces energy consumption on oversized fan and pump systems by up to 30%.**

- Easily Replaces Your Existing Coupling
- Perfect for Oversized Pumps and Fans
- Reduces System Vibration, Increasing Seal and Bearing Life
- Misalignment Tolerant
- Saves up to 30% in Energy Cost
- Eligible for Power Company Energy Conservation Credits

Determine if E-Max is Right for You:

- ☐ You want to reduce energy consumption
- ☐ You are using a valve to reduce system flow or pressure
- ☐ You are considering replacing your equipment with something smaller or considering installing a smaller impeller to meet system demands
- ☐ Your existing fan or pump is oversized for your needs

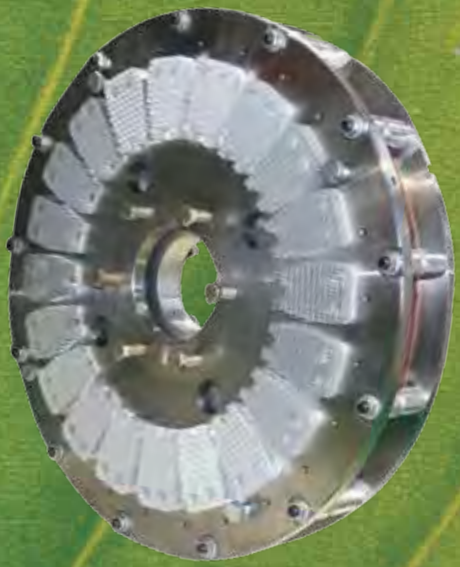

Available Now

Contact MagnaDrive or your distributor today for an energy savings evaluation.

SUCCESS FROM THE FIELD / *Maritime*

SITUATION

When a ship is at sea the structure of the ship flexes with the rolling sea. As a result, systems that were perfectly lined up while the ship was docked shift, causing misalignment and increased wear on rotating equipment. Sailors were wasting an average of *22 days per year per pump* repairing and replacing mechanical seals, couplings, and bearings because of coupling alignment difficulties. In addition, the greased couplings that were being used required quarterly maintenance that produced as much as 1.5 kg of hazardous waste each year per pump.

SOLUTION

FGC™ from MagnaDrive™

SAVINGS

This maritime operator demonstrated that the FGC is capable of accepting up to 6mm of misalignment between the motor and load shafts, proving it a robust and reliable alternative to traditional couplings. As a direct result, maintenance has been reduced by **76% per year, per pump** — from 22 engineering maintenance days, to an average of 7 days. Extensive greasing is no longer a factor in operation, producing no hazardous waste.

Annual Savings Per Coupling, In Labor: **76%**

SUCCESS

In maintenance savings alone, FGC couplings paid for themselves in less than 6 months. The operator estimates its minimum savings from the use of MagnaDrive couplings to be US $6.3 Million per year.

MAGNAGUARD DELAY™ (MGD)

16 - 625 kW

YOUR SOLUTION FOR

Vibration
Pulsating Loads
Thermal Expansion
Shock Loading
Tight Space Constraints
Fluid Coupling Problems

MGD™

ADVANCED DELAYED START SOLUTION

The MagnaGuard Delay™ (MGD) coupling from MagnaDrive™ features a momentary delay in the application of full-torque transfer, protecting your critical equipment from damage.

Dual magnet rotors in the MGD automatically move, allowing the preset Air Gap to increase at startup. Slip is increased, torque is reduced, and your equipment reaps the benefits of an advanced cushioned start. Look for a domino effect of savings—reduced energy from decreased system shock at startup, significantly reduced maintenance and repairs, and more money available for your bottom line.

MGD 14/50

HIGHLIGHTS

MGD from MagnaDrive has all of the benefits of MagnaDrive technology, plus:

- Ideal for High Inertia Systems
- 16 - 625 kW
- Up to 3000 rpm Operation
- Vertical & Horizontal Installation
- ClockWise or Counter-ClockWise Rotation
- Advanced Cushioned Start
- Extra Cushioning During Load Seizures

APPLICATIONS

- Conveyor Belts, Bucket Elevators & other Bulk Handling Equipment
- Pumps
- Compressors
- Air Pre-heaters
- Fans and Blowers
- Chippers and Shredders
- Pulpers and Re-Pulpers
- Crushers and Hammermills
- Mixers
- Many More

TECH-SPECS

See Technical Data on Page 33

SUCCESS FROM THE FIELD / *Power Generation*

SITUATION

Minnesota Power was experiencing severe vibration problems on their air pre-heaters. In an effort to correct this problem, a preventive maintenance procedure was implemented, requiring all couplings to be re-greased during every outage. Each re-greasing would tie up three maintenance technicians for three days. Worse yet, the reduction in vibration levels that was accomplished by the re-greasing would only last a few weeks before the vibration would return.

SOLUTION

MGD™ from MagnaDrive™

SAVINGS

Minnesota Power readings showed a vibration reduction of more than 80%. Vibration problems on their air pre-heaters have been completely eliminated, drastically reducing the need for maintenance and repairs.

Annual Savings Per Coupling, In Non-Energy Operation Costs: **84%**

SUCCESS

Even without taking into account the significant savings from reduced downtime due to lower vibration levels, MGD couplings paid for themselves in less than 4 months.

LENZ LAW & NEWTON'S THIRD LAW OF MOTION: THE OPERATING PRINCIPALS BEHIND OUR TECHNOLOGY

When one body exerts a magnetic flux force on a second body, the second body simultaneously exerts a magnetic flux force equal in magnitude and opposite in direction on the first body.

HEINRICH LENZ
Russian physicist most noted for formulating Lenz law in electrodynamics in 1833. The symbol L, conventionally representing inductance, is chosen in his honor.*

ISAAC NEWTON
English physicist and mathematician, widely recognized as one of the most influential scientists of all time and as a key figure in the scientific revolution. His book "Mathematical Principles of Natural Philosophy", first published in 1687, laid the foundations for classical mechanics.*

Check out our Magnets & Copper demonstration

** As noted on Wikipedia.com*

MAGNAGUARD TORQUE LIMITING™ (MGTL) 30 - 625 kW

YOUR SOLUTION FOR

Vibration
Periodic Load Seizure
Pulsating Loads
Thermal Expansion
Shock Loading
Tight Space Constraints
Fluid Coupling Problems

MGTL™

COMPLETE OVER-TORQUE PROTECTION

Give your equipment an extra layer of protection with the MagnaGuard Torque Limiting™ (MGTL) coupling from MagnaDrive™. Operating with advanced cushioned starts, the MGTL has the additional cutting-edge capability of completely disconnecting the motor from the load in the event of a load seizure, or other over-torque condition—much like a shear pin. Dual magnet rotors move more than 38 mm away from the conductors, eliminating any torque transfer from the motor to the load and protecting your equipment from damage.

MGTL 22/500

AUTOMATED DAMAGE CONTROL

Damage defense starts automatically, without any action on the part of your team. The MGTL can operate in its disconnected condition indefinitely without harm. Stop the motor and MGTL will automatically self-reset. Simply remove the obstruction and your system will be up and running as if the load seizure never occurred.

HIGHLIGHTS

MGTL from MagnaDrive has all of the benefits of MagnaDrive technology, plus:

- 30 - 625 kW
- Up to 3000 rpm Operation
- Horizontal Installation
- ClockWise or Counter-ClockWise Rotation*
- Advanced Cushioned Start
- Preset Peak Torque Disconnects the Motor From the Load During Load Seizures or Jams
- Protects Valuable System Components From Damage
- Self-Resetting When Motor is Turned Off

APPLICATIONS

- Conveyor Belts, Bucket Elevators & other Bulk Handling Equipment
- Pumps
- Compressors
- Air Pre-heaters
- Fans and Blowers
- Chippers and Shredders
- Pulpers and Re-Pulpers
- Crushers and Hammermills
- Mixers
- Many More

TECH-SPECS

See Technical Data on Page 34

**Cannot accommodate reverse rotation applications*

SUCCESS FROM THE FIELD / *Material Handling*

SITUATION

Because of difficulty aligning and balancing fluid hydraulic couplings on a conveyor drive system, the City of San Antonio was experiencing major misalignment issues. Excessive vibration in all directions caused accelerated wear and tear on the system, requiring the City's personnel to perform frequent maintenance. This added the additional concern of contaminating the environment with hydraulic fluid every time maintenance was performed.

SOLUTION

MGTL™ from MagnaDrive™

SAVINGS

After installation of the MGTL from MagnaDrive, vibration readings showed over a 75% reduction overall. Precision alignment is no longer necessary, maintenance is drastically reduced, and the risk of environmental contamination from hydraulic fluid is eliminated.

Annual Savings Per Coupling, In Non-Energy Operation & Maintenance Costs: **84%**

SUCCESS

Even without taking into account the significant savings from reduced downtime due to lower vibration levels, and reduced energy consumption, MGTL couplings paid for themselves in less than 4 months.

FIELD NOTE

MagnaDrive couplings are the only couplings that can be adjusted to meet the exact performance demands of your system(s) and give you energy savings as a by-product.

"Green" Energy Saving Product

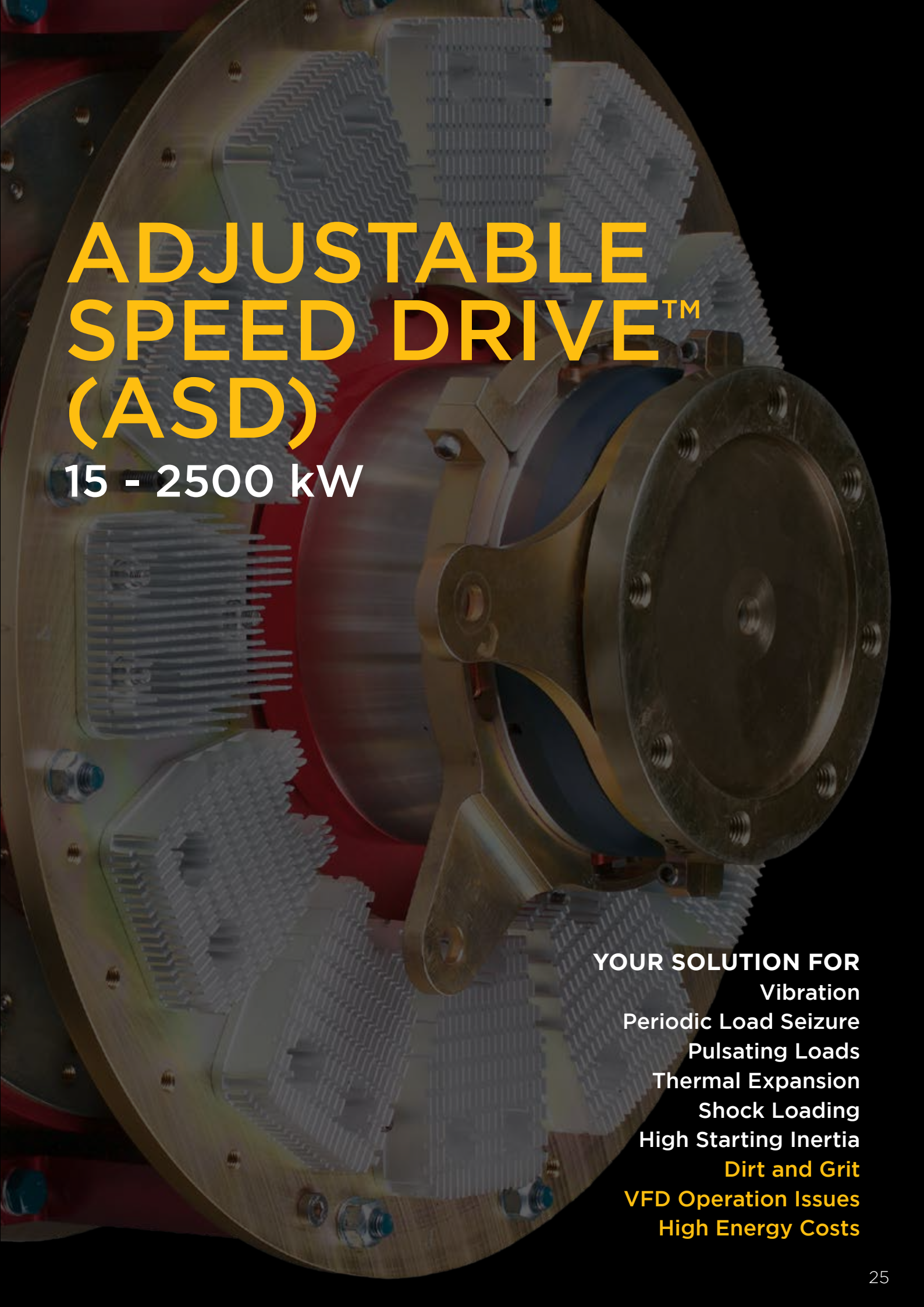

ADJUSTABLE SPEED DRIVE™ (ASD)

15 - 2500 kW

YOUR SOLUTION FOR

Vibration
Periodic Load Seizure
Pulsating Loads
Thermal Expansion
Shock Loading
High Starting Inertia
Dirt and Grit
VFD Operation Issues
High Energy Costs

ASD™

UP TO 70% ENERGY SAVINGS
98% EFFICIENCY
100% CONTROL

The Adjustable Speed Drive™ (ASD) from MagnaDrive™ represents the marriage of our award winning coupling technology with active and precise speed control. Simple, rugged, and accurate, you can get things done in any environment, anywhere. Tied into your existing digital control or SCADA system, MagnaDrive's ASD automatically adjusts the Air Gap to control your load speed. Processes now run according to system needs, controlling and scaling pressure, flow, level and more. Expect minimal maintenance, maximized efficiency, substantial energy savings, and the ability to meet or exceed process goals.

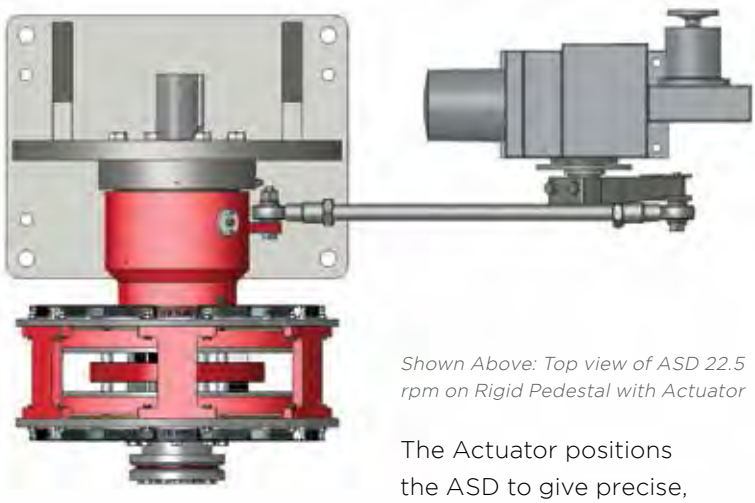

Shown Above: Top view of ASD 22.5 rpm on Rigid Pedestal with Actuator

The Actuator positions the ASD to give precise, repeatable process control using your control system input signal.

HIGHLIGHTS

Adjustable Speed Drives from MagnaDrive have all of the benefits of MagnaDrive technology, plus:

- 15 kW - 4 MW
- Up to 3000 rpm Operation
- Vertical and Horizontal Installation
- Fully Automated Process Control
- Up to 70% Energy Savings*
- Accepts Misalignment
- Requires Only Electric Power and Control Signal to the Actuator
- Allows Motors to Operate at Full Speed (Where Cooling is More Effective)
- Eliminates Harmful Electronic Harmonics
- Eliminates Control Valves & Dampers
- Optional Manual Speed Adjustment
- Does Not Require Use of an Inverter-Duty Motor
- Readily Installed - Retrofit or New Install
- Lowest Total Cost of Ownership

INSTRUMENTATION

MagnaDrive supplies machine monitoring instrumentation upon request:

- Temperature Sensors
- Speed Sensors
- Position Indicators
- And More

TECH-SPECS

See Technical Data on Page 35

* *Testing by the U.S. Department of Energy demonstrated that MagnaDrive's products reduce energy usage by up to 70% over the course of a product's lifetime, compared to traditional couplings*

COOLING METHODS

Choose an air or water cooled ASD. Air cooling is best for applications 310 kW and lower, while water cooling is often recommended when your application exceeds 375 kW, or your motor uses a low rpm.

AIR COOLED

- Uses the Movement of Air Over Spinning Conductors to Dissipate Heat
- Up to 375 kW
- Motor Speed up to 3000 rpm
- Selection Based on kW and Rpm of Specific Application
- Custom Features Available

AIR COOLED APPLICATIONS

Ideal for Medium to High Electric Voltage Motor Applications:

- Centrifugal Pumps
- Centrifugal Fans & Blowers
- Variable Torque Equipment
- Centrifuges
- Many More

RIGID PEDESTAL MOUNT OPTION

- For Pumps with Small Diameter/Long Shafts
- Split-Case Pumps
- Cooling Tower Fans

VERTICAL KIT OPTION

- Vertical Pump Applications
- Thrust Pot Available with Optional Non-Reversing Clutch
- Ideal for Vertical Turbine Pumps

WATER COOLED

- Uses the Rotation of Magnet Rotors and Conductors to Centrifugally Draw a Steady Stream of Cooling Water Over the Drive Components, Providing Conductive Cooling to Dissipate Heat
- Optional Closed Loop Coolant Circulating System
- Up to 4 MW
- 1500 rpm or Lower
- Horizontal and Vertical Configurations
- Optional Non-Reverse Clutch Available on Vertical Configurations
- Design Based on kW and rpm of Specific Application
- Custom Features Available

WATER COOLED APPLICATIONS

Ideal for Medium to High Electric Voltage Applications:

- Water Supply Pump Stations
- Waste Water Pumping Stations
- Vertical Turbine Pumps
- Centrifugal Fans and Blowers
- Slurry Pumps
- Water Treatment Aeration Fans
- Cooling Tower Fans
- Many More

SUCCESS FROM THE FIELD / *HVAC*

SITUATION

The water supply at the Grand Hyatt Hotel in Seattle, WA is provided by three pumps that operate sequentially in response to demand from guest rooms. Hotel occupancy varies dramatically. During high occupancy levels, management found that water pressure on upper floors was an issue, marring their attempt at moving from #2 to #1 ranking in overall customer satisfaction, across all Hyatt Hotels. System misalignment and excess energy use were also issues.

SOLUTION

Air Cooled ASD™ from MagnaDrive™

SAVINGS

Following ASD installation, water pressure complaints plummeted to near zero. Every room now receives smooth and consistent target water pressure and supply, whether the hotel is at partial capacity or completely full—without the stepped response often seen in a multiple valve system. The Grand Hyatt Hotel is now realizing significant energy savings and vibration reductions greater than 70%.

Annual Savings Per Coupling, In Non-Energy Operation Costs: **52%**

SUCCESS

Not including the benefits of reduced maintenance and higher customer satisfaction, ASDs from MagnaDrive paid for themselves in 6 months.

MagnaDrive VS. Variable Speed (VFDs) & Eddy Current Drives

	VARIABLE SPEED DRIVES (VFDs / Eddy Current)	**MagnaDrive™** **COUPLINGS & ADJUSTABLE SPEED DRIVES**
MOTOR & LOAD CONNECTION	**Directly coupled** • Creates vibration transfer and misalignment problems • Energy spent flexing an elastomeric disc or spring is energy that is not going toward your bottom line	**NO physical connection** • Torque is transmitted across an Air Gap • Friction-free patented technology
LIFE OF BEARINGS, SEALS & OTHER EQUIPMENT	**Decreases equipment life** • Greater vibration transfer and misalignment stress • Increased wear in motor and bearings leads to additional friction losses in your system • Frequent seal and bearing failures	**INCREASES equipment life** • Tolerant of misalignment • No harmful vibration
INSTALLATION & SPECIAL REQUIREMENTS	**VFDs require extensive infrastructure** • Cooling & dust/ environment protection cabinets • Power filters • Inverter duty Motors • Other Peripheral equipment **Eddy Current Drives require extra infrastructure** due to their very heavy and bulky nature	**SIMPLE mechanical installation** • Low infrastructure • No electronic components • Not affected by "dirty" power • No special cooling cabinets or power control equipment • Works with any motor • Easy to retrofit
OPERATION & MAINTENANCE	**Harmonics & electronic system interference** • Bearing 'fluting' decreases motor life and creates harmful vibration • No quick restart • Environmental disposal issues • No overload protection	**GREEN product** • Efficient torque transfer • Simple to operate & maintain • Increased equipment life • No harmonics • Rapid restart capability
SYSTEM EFFICIENCY & ENERGY SAVINGS	**VFDs experience dramatic efficiency losses** from coupling misalignment, and from filters, transformers, cooling systems & other cooling equipment **Eddy Current Drives lose energy** by requiring extra power to energize the electromagnet	**98% EFFICIENT** • No energy losses for ancillary equipment • Fine-tuned Air Gap for desired process performance • Lowers peak demand current and duration of inrush

For more information, contact MagnaDrive.

TECHNICAL DATA

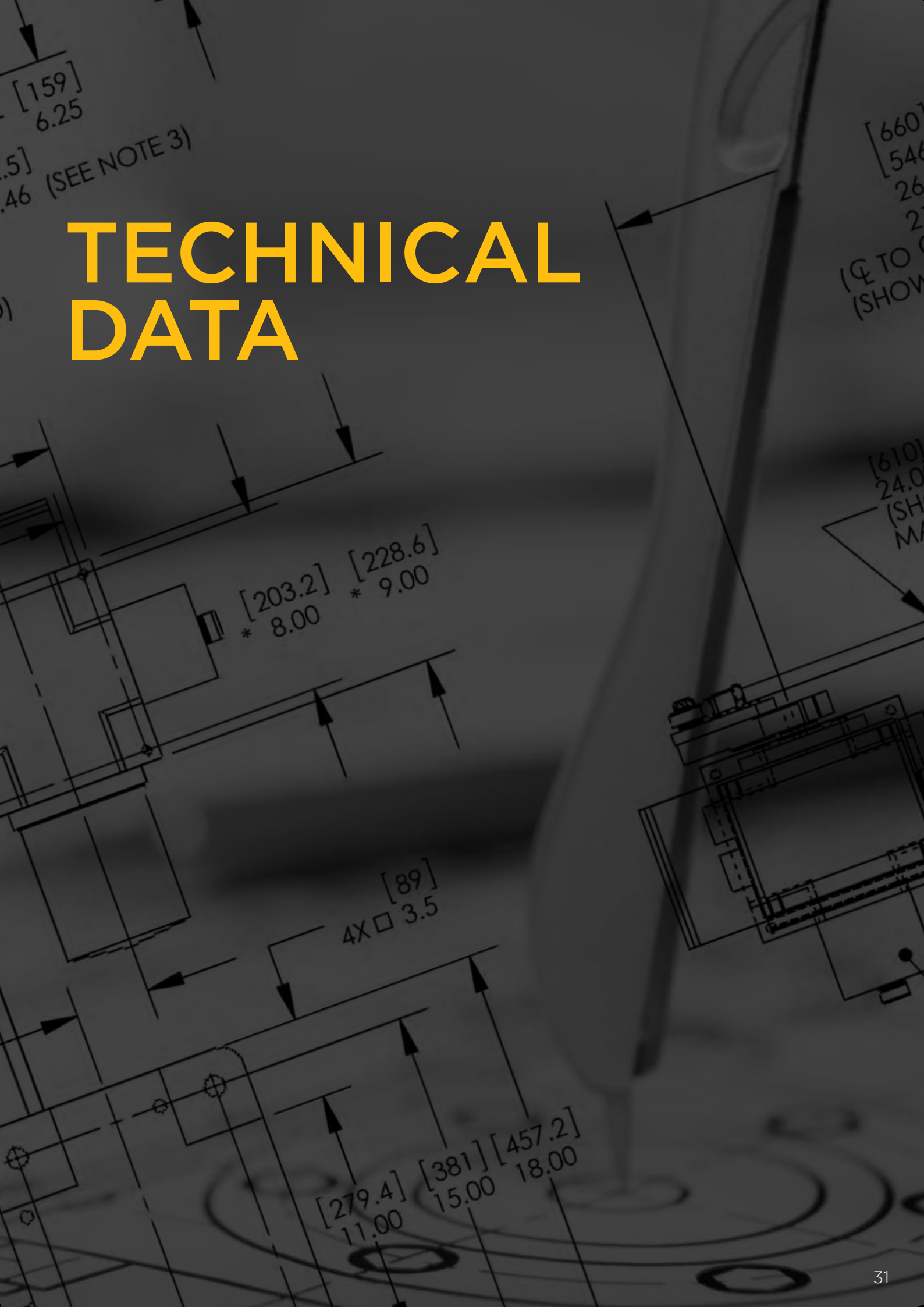

Fixed Gap Coupling™ (FGC) Tech-Specs

	CONDUCTOR SIDE ASSEMBLY				MAGNET SIDE ASSEMBLY		COUPLING					
	Ø	LENGTH	WEIGHT	DRIVER SHAFT END TO CG*	WEIGHT	LOAD SHAFT END TO CG*	DBSE*	COUPLING OAL***	ANGULAR MISALIGNMENT CAPACITY	COUPLING INTERNAL RADIAL CLEARANCE**	PEAK TORQUE (AT MIN. AIR-GAP)	MAX RPM
Model	mm	mm	kg	mm	kg	mm	mm	mm	degrees	mm	N-m	rpm
4.5S	152	74	4.1	19	2.3	1	51	132	2.39	6	24	3,000
6.5S	203	74	6.8	19	3.2	1	51	117	1.65	6	55	3,000
8.5S	279	97	16.3	36	5.4	1	89	152	1.68	6	156	3,000
10.5S	330	94	24.9	35	9.1	1	89	160	1.36	6	301	3,000
12.5S	381	94	32.2	44	12.7	1	89	160	1.15	6	467	3,000
14.5S	432	100	43.5	29	17.7	1	89	165	0.99	6	713	3,000
16.5S	483	100	49.9	42	24.9	0.5	89	178	0.87	6	1011	3,000
18.5S	533	100	66.7	37	34.5	1	127	203	0.77	6	1361	3,000
20.5S	584	100	78.5	35	34.5	1	127	165	0.87	6	1574	3,000
22.5S	635	100	91.2	39	45.8	1	127	241	0.8	6	1979	3,000
24.5S	686	100	101.6	34	48.5	1	127	203	0.73	6	2431	1,500
26.5S	737	100	136.1	34	72.6	1	127	203	0.81	6	2589	1,500
28.5S	787	100	140.2	34	68.0	1	127	203	0.75	6	3070	1,500
10.5D	330	138	36.3	57	18.1	2	127	229	1.36	6	603	3,000
12.5D	381	138	47.6	68	23.6	2	140	229	1.15	6	933	3,000
14.5D	432	138	63.5	64	27.2	2	152	229	0.99	6	1426	3,000
16.5D	483	138	72.6	64	40.8	2	152	229	0.87	6	2022	3,000
18.5D	533	138	84.8	59	49.0	2	152	241	0.77	6	2722	3,000
20.5D	584	145	101.6	68	55.8	2	152	267	0.87	6	3148	3,000
22.5D	635	145	123.8	58	67.1	1	152	279	0.8	6	3958	1,500
24.5D	686	145	131.5	58	72.6	1	152	279	0.73	6	4861	1,500
26.5D	737	151	145.1	57	86.2	1	152	279	0.81	6	5179	1,500
28.5D	787	151	176.9	60	108.9	1	152	279	0.75	6	6141	3,000
17.0S	527	162	97.1	64	41.7	2	178	264	0.84	6	1622	3,000
19.0S	578	162	122.9	65	57.2	3	203	259	0.75	6	2280	3,000
21.0S	629	162	142.0	65	77.1	3	203	259	0.85	6	2664	3,000
25.0S	730	162	194.1	81	116.1	3	203	338	0.72	10	4821	3,000
29.0S	832	162	242.7	77	134.7	2	203	328	0.74	10	6526	3,000
33.0S	933	162	305.7	68	182.8	1	203	302	0.65	10	9255	1,500
37.0S	1035	162	397.3	62	265.8	2	203	356	0.58	10	12458	1,500
21.0D	629	318	226.8	127	113.4	5	305	508	0.85	6	5328	3,000
25.0D	730	343	290.3	133	136.1	5	305	508	0.72	10	9641	3,000
29.0D	832	343	392.4	151	256.3	4	324	508	0.74	10	13051	3,000
33.0D	933	343	462.7	152	340.2	6	356	533	0.65	10	18509	1,500
37.0D	1035	343	589.7	152	408.2	6	356	559	0.58	10	24916	1,500

These dimensions may vary per application. | *at min. shaft engagement | **For Parallel Shaft MAL | *** Close Coupled (Standard Hubs)

Vortex™ (VTX) Tech-Specs

	CONDUCTOR SIDE ASSEMBLY				MAGNET SIDE ASSEMBLY		COUPLING					
	Ø	LENGTH	WEIGHT	DRIVER SHAFT END TO CG*	WEIGHT	LOAD SHAFT END TO CG*	DBSE*	COUPLING OAL***	ANGULAR MISALIGNMENT CAPACITY	COUPLING INTERNAL RADIAL CLEARANCE**	PEAK TORQUE (AT MIN. AIR-GAP)	MAX RPM
Model	mm	mm	kg	mm	kg	mm	mm	mm	degrees	mm	N-m	rpm
VTX-03	165	14	2.50	25.4	2.81	12.7	50.8	104.14	1.5	N/A	27.9	3000
VTX-07	235	75	9.53	40.64	4.99	17.78	88.9	155.70	1.5	3.175	78.6	3000
VTX-11	334	81	20.87	43.18	9.53	19.05	88.9	170.18	1.5	3.175	272.5	3000

MagnaGuard Delay™ (MGD) Tech-Specs

	CONDUCTOR SIDE ASSEMBLY				MAGNET SIDE ASSEMBLY		COUPLING					
	Ø	WIDTH	WEIGHT	DRIVER SHAFT END TO CG*	WEIGHT	DISTANCE	DBSE*	COUPLING OAL***	ANGULAR MISALIGNMENT CAPACITY	COUPLING INTERNAL RADIAL CLEARANCE**	PEAK TORQUE (AT MIN. AIR-GAP)	MAX RPM
Model	mm	mm	kg	mm	kg	mm	mm	mm	degrees	mm	N-m	rpm
12/20	298	158	16.8	61	17.7	65	174	257	1.46	5	141	3,000
14/30	368	158	24.9	69	24.0	71	174	257	1.75	8	253	3,000
14/40	368	158	24.9	69	26.3	73	174	257	1.17	8	354	3,000
14/50	368	158	24.9	69	27.2	73	174	257	1.17	8	404	3,000
16/60	419	158	32.2	73	33.6	76	174	257	0.99	5	495	3,000
16/75	419	158	32.2	73	35.4	77	174	257	0.99	5	618	3,000
16/100	416	180	35.8	84	44.0	96	224	305	0.99	5	743	3,000
16/125	416	180	35.8	84	46.7	98	224	305	0.99	5	992	3,000
16/150	416	180	35.8	84	49.4	99	224	305	0.99	5	1,243	3,000
16/200	416	180	35.8	84	52.2	100	224	305	0.99	5	1,491	3,000
18/250	470	180	45.8	88	59.9	94	214	297	0.87	5	2,079	3,000
18/300	470	180	45.8	88	62.6	95	214	297	0.87	5	2,384	3,000
20/350	562	184	79.4	90	93.0	88	219	325	0.76	3	2,836	3,000
20/400	562	184	79.4	90	95.7	89	219	325	0.76	3	3,186	3,000
22/450	613	184	92.1	93	105.2	90	219	325	0.7	3	3,570	3,000
22/500	613	184	92.1	93	108.0	91	219	325	0.7	3	3,977	3,000
22/600	613	184	92.1	93	110.7	91	219	325	0.7	3	4,373	3,000
24/700	706	207	135.6	104	178.3	103	258	396	0.58	6	7,638	3,000
24/1000	706	207	135.6	104	190.1	104	258	396	0.58	6	9,830	3,000

These dimensions may vary per application. | *at min. shaft engagement | **For Parallel Shaft MAL | *** Close Coupled (Standard Hubs)

FIELD NOTE

MagnaDrive has invested over US $30 million developing its technology.

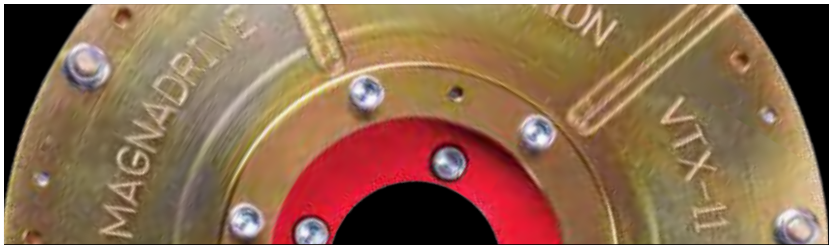

MagnaGuard Torque Limiting™ (MGTL) Tech-Specs

	CONDUCTOR SIDE ASSEMBLY				MAGNET SIDE ASSEMBLY		COUPLING					
	Ø	WIDTH	WEIGHT	DRIVER SHAFT END TO CG*	WEIGHT	DISTANCE TO CG*	DBSE*	COUPLING OAL***	ANGULAR MISALIGNMENT CAPACITY	COUPLING INTERNAL RADIAL CLEARANCE**	PEAK TORQUE (AT MIN. AIR-GAP)	MAX RPM
Model	mm	mm	kg	mm	kg	mm	mm	mm	degrees	mm	N-m	rpm
14/40	368	199	25.4	86	26.8	90	216	297	1.17	8	354	3,000
14/50	368	199	25.4	86	27.7	90	216	297	1.17	8	404	3,000
16/60	419	199	32.7	90	34.0	94	216	297	0.99	5	495	3,000
16/75	419	199	32.7	90	35.8	95	216	297	0.99	5	618	3,000
16/100	416	234	36.7	105	44.9	118	278	359	0.99	5	743	3,000
16/125	416	234	36.7	105	47.6	119	278	359	0.99	5	992	3,000
16/150	416	234	36.7	105	50.3	121	278	359	0.99	5	1,243	3,000
16/200	416	234	36.7	105	53.1	122	278	359	0.99	5	1,491	3,000
18/250	470	234	46.3	110	61.2	118	268	349	0.87	5	2,079	3,000
18/300	470	234	46.3	110	64.0	119	268	349	0.87	5	2,384	3,000
20/350	562	239	81.6	111	98.9	111	273	378	0.76	3	2,836	3,000
20/400	562	239	81.6	111	101.6	112	273	378	0.76	3	3,186	3,000
22/450	613	239	93.9	115	111.1	114	273	378	0.7	3	3,570	3,000
22/500	613	239	93.9	115	113.9	114	273	378	0.7	3	3,977	3,000
22/600	613	239	93.9	115	116.6	115	273	378	0.7	3	4,373	3,000
24/700	706	273	137.0	128	187.8	133	324	463	0.58	6	7,638	3,000
24/1000	706	273	137.0	128	199.6	134	324	463	0.58	6	9,830	3,000

These dimensions may vary per application. | *at min. shaft engagement | **For Parallel Shaft MAL | *** Close Coupled (Standard Hubs)

FIELD NOTE

Our state-of-the-art R&D Center and manufacturing facility is operated in Woodinville, WA USA.

Adjustable Speed Drive™ (ASD) Tech-Specs

Air Cooled

	CONDUCTOR SIDE ASSEMBLY					MAGNET SIDE ASSEMBLY		COUPLING				
	DBSE	Ø	WIDTH	WEIGHT	DISTANCE TO CG	WEIGHT	DISTANCE TO CG	PEAK LINEAR TORQUE	TORQUE PER RPM OF SLIP	ASD MAX RPM	ARM LENGTH	LINEAR FORCE
Size	mm	mm	mm	kg	mm	kg	mm	N-m	N-m	rpm	mm	kg
6.5	216	206	172	11	41	11	91	41	0.1	3000	102	9
8.5	219	257	172	15	45	15	105	81	0.4	3000	102	9
10.5	308	343	226	45	64	45	122	122	0.7	3000	152	27
12.5	308	400	226	54	67	54	134	285	2.2	3000	152	36
14.5	308	451	226	61	70	61	144	427	4.2	3000	152	45
16.5	329	508	242	88	66	88	150	610	7.0	3000	152	59
18.5	367	559	231	90	62	90	186	813	10.9	3000	203	68
20.5	367	610	231	103	60	103	193	1058	16.0	3000	203	82
22.5	424	626	260	148	73	148	228	1383	29.8	1500	254	159
24.5	470	727	269	231	61	231	236	1681	54.9	1500	279	227
26.5	470	727	269	237	61	237	239	2034	64.8	1500	279	227
20.5/22.5	368	626	235	104	63	104	193	1058	16.0	3000	203	82
22.5/24.5	424	727	260	151	77	151	222	1383	29.8	1500	254	159
24.5/28.5	470	778	269	231	67	231	236	1681	54.9	1500	279	227
26.5/28.4	470	778	269	237	67	237	239	2034	64.8	1500	279	227

Water Cooled - Horizontal

	LENGTH (L)	HEIGHT (H)	WIDTH (W)	WEIGHT	TORQUE PER RPM OF SLIP	TORQUE PEAK LINEAR	ASD MAX RPM	COOLING WATER FLOW
Model	mm	mm	mm	kg	N-m	N-m	rpm	liters/min
WH-1000	1532	1735	1120	2324	119	4284	1500	57
WH-2500	1532	1735	1120	2324	240	10657	1500	132
WH-4000	1887	2065	1427	4681	780	24669	1000	189

Water Cooled - Vertical

	DIAMETER (D)	HEIGHT (H)	WEIGHT	TORQUE PER RPM OF SLIP	PEAK LINEAR TORQUE	ASD MAX. RPM	COOLING WATER FLOW
Model	mm	mm	kg	N-m	N-m	rpm	liters/min
WV-1000	1016	1580	2404	119	4284	1500	57
WV-2500	1016	1580	2515	240	10657	1500	132
WV-4000	1321	2007	4720	780	24669	1000	189

These dimensions may vary per application.

MagnaDrive™ CORPORATION

WORLD HEADQUARTERS
14660 NE North Woodinville Way, Suite 100
Woodinville, Washington, USA 98072

MAGNADRIVE.COM

P +1 (425) 463-4700 **F** +1 (425) 487-3700

"Green" Energy Saving Product

Check out our interactive search tool to find the MagnaDrive distributor closest to you.

IndustryWeek 2001 TECHNOLOGY OF THE YEAR

Deloitte. Technology Fast 100™

Inc. 500

MagnaDrive is proud to be a member contractor of *ISNetworld®, a global resource for connecting hiring clients with safe and reliable contractors.*

©2015 MagnaDrive Corporation™. MagnaDrive™, Vortex™, FGC™, MGD™, MGTL™ and ASD™ are trademarks of MagnaDrive Corporation. All other logos contained within belong to their respective entities and are not affiliated or in partnership with MagnaDrive Corporation.

**ISN®, ISNetworld®, and RAVS® are registered trademarks of ISN Software Corporation.*