SAMIFLEX
ELASTIC COUPLINGS

ATEX
APPROVAL DIRECTIVE
94/9/EC

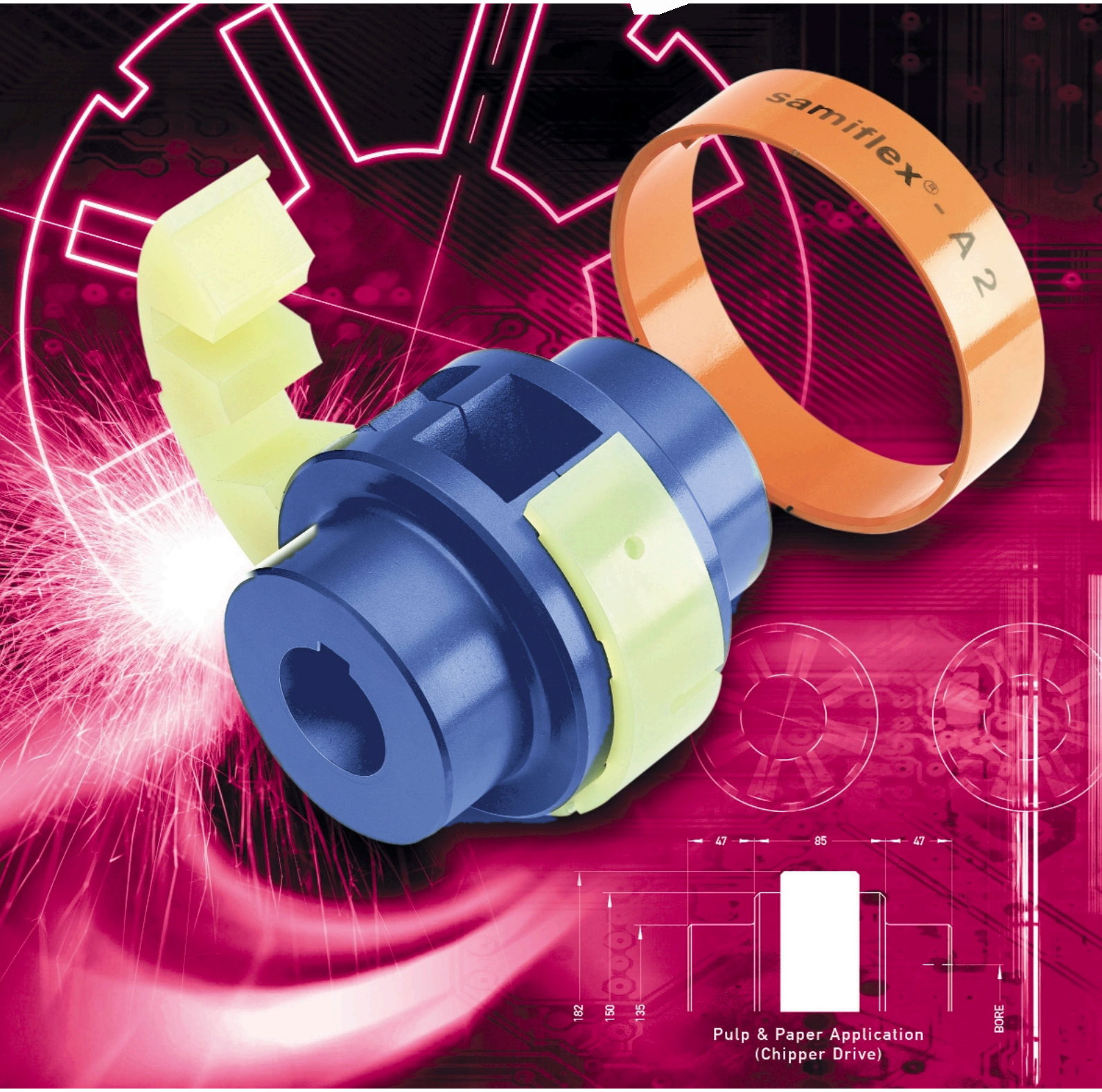

SAMIFLEX ELASTOMERIC COUPLINGS

Now there's a new solution to one of the most costly and troublesome problems facing maintenance personnel - coupling failure and the expensive down time associated with fixing it.

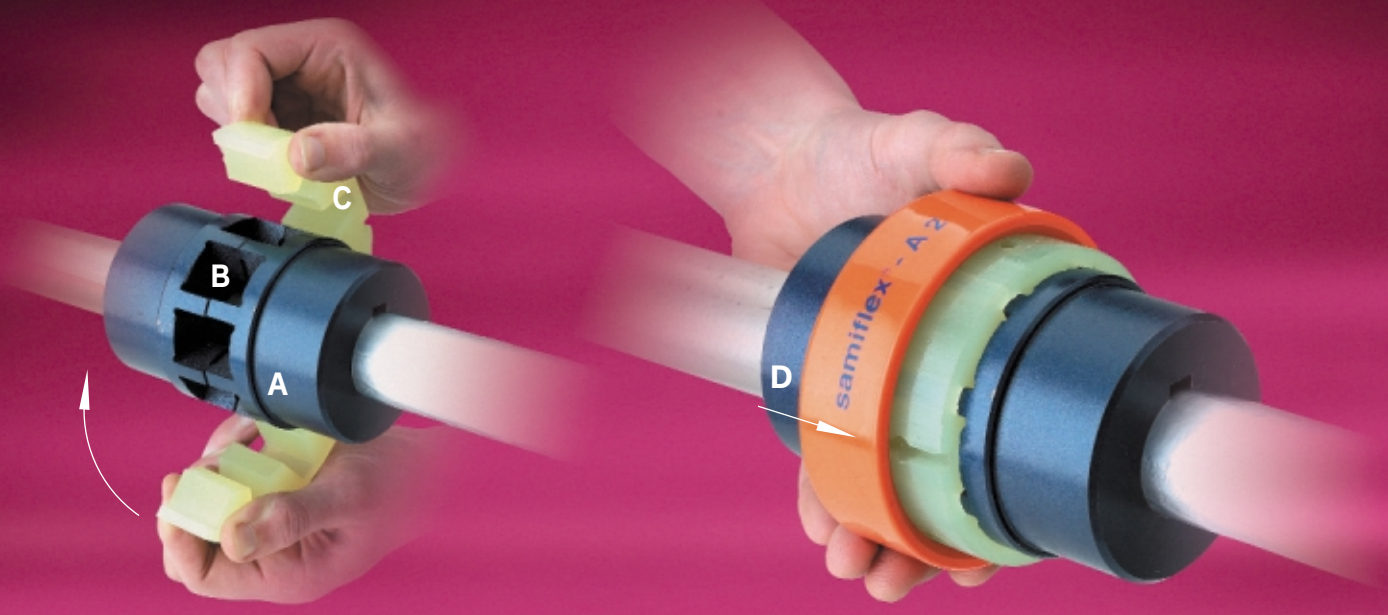

Only four parts to the Samiflex Coupling

The two identical hubs (items A & B) are manufactured in cast iron, cast steel or aluminium alloy and incorporate four, six or eight teeth, depending on size rating of the coupling.
A precision cast and machined polyurethane insert (item C) fits between the hubs and is split axially so fitting and removal can be achieved without moving hubs. The holding ring, manufactured in steel, polyamide or bronze (item D) is fitted over the insert securing both insert and ring between hubs. The coupling requires no bolts or nuts.

Assembly & Disassembly

Once hubs (A) and (B) and holding ring (D) have been installed and aligned on the shafts the coupling hubs will not have to be moved again during the life of the equipment. The elastic insert (C) can then be installed between the parallel slots formed by the hub teeth.

With the insert in position, slide the retaining ring (D) into position over the polyurethane insert. Centrifugal force will expand the insert under operation ensuring a tight, secure fit inside the retaining ring.

Removing and replacing the coupling insert is very simple and requires no special tools. By removing the retaining ring, the insert can be quickly and easily removed and replaced without the need to undo screws, bolts or other fasteners.

ATEX Approval

The range of Samiflex Couplings has been approved under ATEX directive 94/9/EC - for use in potentially explosive atmospheres.

Features and Benefits

- Coupling insert removable without the need to remove either driving or driven equipment.
- Change out of coupling insert is faster than any other coupling.
- No lubrication or maintenance required over the life of the insert.
- The polyurethane insert can be supplied in a variety of hardnesses to optimise torque capacity and damping.
- Polyurethane insert is very resistant to chemical attack.
- Standard insert can handle large temperature range from -40 to 80 °C.
- High temperature insert available up to 150 °C.
- Hubs can be rotated independently during motor test.
- No metal to metal contact
- Large bore to torque capacity
- Vertical operation possible with standard coupling.
- Retaining rings provided with locking screws as standard.

The specification contained within this brochure are correct at time of going to print. Autogard are continually reviewing and updating the specifications on all its product range and therefore reserve the right to change any detail.

SAMIFLEX THE ELASTIC INSERT

The Samiflex elastic insert is manufactured from a special blend of polyurethane compound manufactured to best meet the demanding characteristics of a high performance elastic coupling.

Samiflex elastic inserts are offered in three styles of compound and four hardness ratings allowing the most appropriate insert to be selected for the application.

The standard elastic insert is supplied at 95 shore and is a yellow colour. High performance inserts type HD and HDT are coloured brown and red respectively and enable Samiflex torque ratings to be increased by 40% (consult factory).

Insert	Ref.	Hardness	Colour	Temp. Rating
Standard	STD	80 Shore A	Clear	-40 / 80 C
		90 Shore A	Blue	
		95 Shore A	Yellow	
High Temp.	HT	95 Shore A	Orange	-40 / 140 C
High Performance	HD	97 Shore A	Brown	-40 / 80 C
	HDT	97 Shore A	Red	-40 / 140 C

Coupling Selection

Method

Data required for Coupling Selection.

- Application details (for service factor)
- Kilowatt and rpm of the driver.
- Shaft details of the driving and driven equipment.

(1) Determine the service factor (SF) from the application and classification lists noted below.

(2) Calculate the maximum Kw/1000 rpm rating:
Kw/1000 rpm = (Kw x 1000 x SF) / rpm
Select the coupling which has a higher max rating.

(3) Compare the maximum rpm capacity & bore requirements to the catalogue limits for the coupling selected.

Example

Driver: Water Turbine (75 Kw at 1500 rpm)
Driven equipment: Screw Compressor
Turbine Bore: 60 mm Compressor Bore: 50 mm
Distance Between Shaft Ends: 140 mm

Service Factor for the Water Turbine & Screw Compressor: SF = 2

Kw/1000 rpm = (75 Kw x 1000 x 2) / 1500
Kw/1000 rpm = 100

Coupling selection based on max rating: A4B
Coupling Bore Capacity: 75 mm
Maximum Speed for the A4B is 3275 rpm unbalanced.
DBSE for the A4B Type SP is 140 mm
The A4B Type SP is acceptable in this application.

Service Factors - SF

Load Characteristics	Electric Motor, Steam Turbine Gas Turbine	Steam Engine, Water Turbine, 8 Cyl. Recip. Engine	6 Cyl. Recip. Engine	4 Cyl. Recip. Engine
Constant Torque eg. Centrifugal pumps, compressors & blowers, light duty agitators and fans.	1.0	1.5	2.0	2.5
Slight Fluctuations eg. Slurry pumps, Screw compressors, Lobe and Vane Blowers.	1.5	2.0	2.5	3.0
Moderate Fluctuations and/or Slight Shock Loads Double acting pumps, Recip. Comp.	2.0	2.5	3.0	3.5
Large Fluctuations and/or Moderate Shock Loads 1 or 2 Cylinder Recip.pumps.	2.5	3.0	3.5	4.0
Shock Loads or Light Torque Reversals Slitters, Rod Mill, Hot Mill	3.0	3.5	4.0	Consult Factory
Heavy Shock Loads or Large Torque Reversals Feed Rolls, Reversing Mills	Consult Factory	Consult Factory	Consult Factory	Consult Factory

(1) Use a minimum Service Factor of 1.25 when driving through a gearbox or using a direct on-line electric motor.
(2) Consult Autogard when using a reciprocating engine with fewer than 4 cylinders.
(3) Service Factors provided are for reference only. Customer experience may dictate the selection of different service factors.

SAMIFLEX COUPLING TYPE A

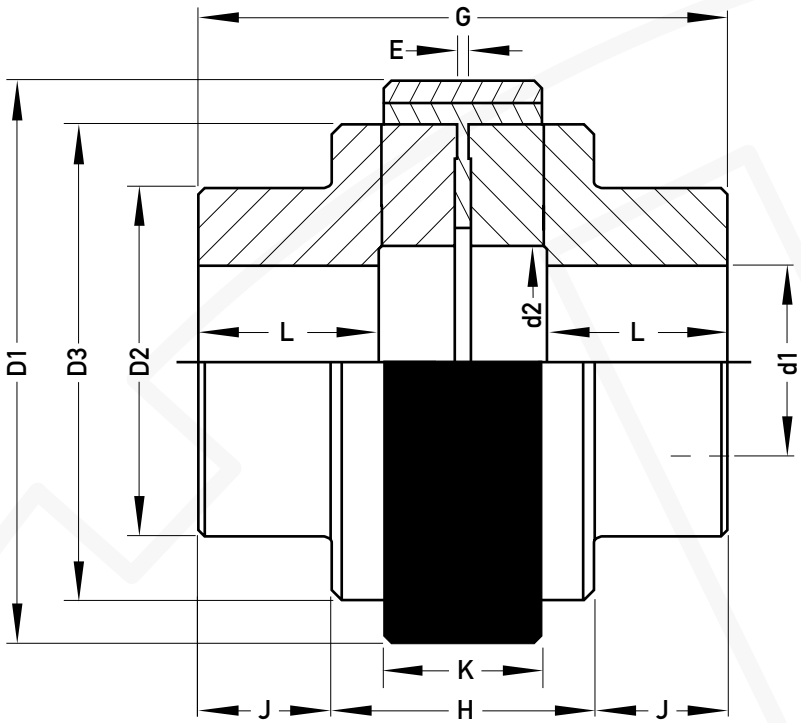

Technical Details and Dimensions

Coupling Type		A0	A1	A2	A3	A3B	A4	A4B	A45	A5	A5B	A55	A6	A7	A8	A9	A10	A11	A12
STD & HT Insert	Maximum KW per 1000	6	14	29	58	58	120	120	211	301	301	361	482	963	1806	2880	4607	6157	20942
	Max. Cont. Torque Nm	55	138	275	550	550	1150	1150	2013	2875	2875	3450	4600	9200	17250	27500	44000	58800	200000
HD & HDT Insert	Maximum KW per 1000	-	-	-	-	-	162	162	283	406	406	487	649	1298	2346	3743	5990	8000	-
	Max. Cont. Torque Nm	-	-	-	-	-	1550	1550	2700	3875	3875	4650	6200	12400	22400	35750	57200	76400	-
Technical data	Max. Speed - Unbal.	11000	8800	6500	4900	4900	3800	3800	3300	3000	3000	2650	2450	2100	1750	1450	1175	1250	875
	Max. Speed - Bal. (Steel)	14650	11750	8850	6500	6500	5000	5000	4475	4000	4000	3550	3250	2850	2345	1985	1580	1650	1175
	Moment of Inertia (Kg-m2)	–	0.0012	0.005	0.012	0.020	0.050	0.075	0.102	0.155	0.210	0.275	0.437	0.825	2.326	4.95	12	16	52
	Weight (Kg)	1	1.8	3.8	6.2	8.5	12.5	16	19	26	31	36	47	75	137	218	350	410	1000
Displacement values	Axial Tolerance	+0.3	+0.5	+0.5	+0.7	+0.7	+0.8	+0.8	+1.0	+1.0	+1.0	+1.0	+1.0	+1.0	+1.5	+1.5	+2.0	+2.0	+3.0
	Radial / Parallel	0.30	0.30	0.50	0.50	0.50	0.70	0.70	0.70	0.70	0.70	0.80	0.80	1.00	1.00	1.00	1.50	1.50	0.6
	Angular Tolerance	2	2	2	2	2	1.3	1.3	1.3	1.3	1.3	1.3	1.3	1	1	1	1	1	0.7

Coupling Type		A0	A1	A2	A3	A3B	A4	A4B	A45	A5	A5B	A55	A6	A7	A8	A9	A10	A11	A12
Dimensions (mm)	Max. Bore d1	24	38	44	50	58	65	70	75	85	95	95	110	130	150	180	210	210	300
	Pilot Bore	8	14	17	19	19	24	24	25	29	29	30	39	48	63	73	96	96	100
	D1	65	83	111	144	144	182	182	202	225	225	250	265	306	363	425	523	503	710
	D2	52	65	80	85	105	110	140	125	140	160	155	180	205	242	280	330	350	500
	D3	52	65	86	116	116	150	150	170	190	190	215	233	267	326	385	483	458	650
	d2	32	39	45	52	52	70	70	90	89	89	115	112	135	157	188	218	216	380
	G	73	91	127	156	156	180	180	198	216	216	246	260	310	382	420	482	512	709
	L	28	34	47	56	56	63	63	70	77	77	90	95	116	147	162	188	190	250
	Standard "DBSE"	17	23	33	44	44	54	54	58	62	62	66	70	78	88	95	106	132	209
	Dist. Between Hubs "E"	1.5	1.5	2.5	2.5	2.5	3.5	3.5	3.5	3.5	3.5	3.5	3.5	4	5	5	6	6	5
	H	–	–	55	65	65	85	85	93	101	101	109	119	134	154	162	192	216	359
	J	–	–	36	45	45	47	47	52	57	57	68	70	88	114	129	145	148	175
	K	16	22	32	42	42	51	51	56	59	59	64	67	75	85	92	102	128	210

1) STD Inserts will be supplied as standard unless specified. High Torque (HD), High Temperature (HT) or High Torque & Temperature (HDT) Inserts can be supplied upon request.
2) Maximum unbalanced speeds are based on Cast Iron Hubs. Higher speeds may be attained using Ductile Iron or Steel Hubs - Consult Autogard
3) Distance Between Shaft ends (DBSE) is based on the shafts mating flush with the end of the hub face. Shorter or longershaft separations may be obtained by overhanging the shaft or hub
4) Weights and inertias are based on solid hubs.
5) Peak torque is 2 x maximum continuous torque.

SAMIFLEX COUPLING FOR TAPER BUSH

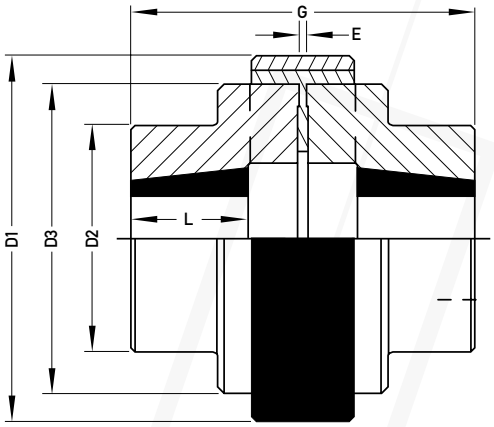

Type TBI

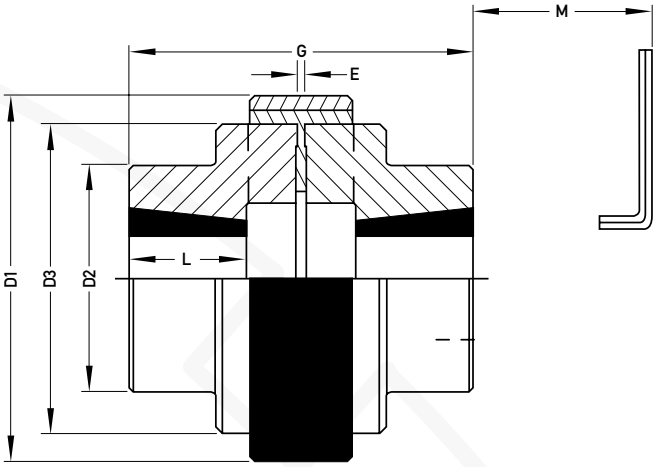

Type TB

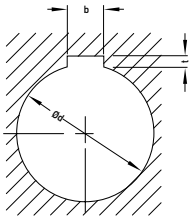

Samiflex Coupling Bored to Suit Taper Lock Bushings

Coupling Size	Taper Bush	Bore Range		Dimensions						
		min.	max.	L	G	E	D1	D2	D3	M
A1 -TB/TBI	1108	9	28	27	77	1.5	83	65	65	29
A2 -TB/TBI	1210	11	32	32	97	2.5	111	80	86	38
A3 -TB/TBI	1610	14	42	32	107	2.5	144	85	116	38
A4 -TB/TBI	2012	14	50	38	130	3.5	182	110	150	42
A45 -TB/TBI	2517	16	60	50	158	3.5	202	125	170	50
A5 -TB/TBI	3020	25	75	56	173	3.5	225	160	190	55
A6 -TB	3535	35	90	95	259	3.5	265	180	233	67
A7 -TB	4040	40	100	120	318	4	306	205	267	70

Dimensions - Taper Bushes																																	
d	9	10	11	12	14	16	18	19	20	22	24	25	28	30	32	35	38	40	42	45	48	50	55	60	65	70	75	80	85	90	95	100		
b	3	3	4	4	5	5	6	6	6	6	8	8	8	8	10	10	10	12	12	14	14	14	16	18	18	20	20	22	22	25	25	28		
t	1.4	1.4	1.8	1.8	2.3	2.3	2.8	2.8	2.8	2.8	3.3	3.3	3.3	3.3	3.3	3.3	3.3	3.3	3.3	3.8	3.8	3.8	4.3	4.4	4.4	4.9	4.9	5.4	5.4	5.4	5.4	6.4		
1108	*	*	*	*	*	*	*	*	*	*	*	*	*																					
1210			*	*	*	*	*	*	*	*	*	*	*	*	*																			
1610					*	*	*	*	*	*	*	*	*	*	*	*	*	*	*															
2012					*	*	*	*	*	*	*	*	*	*	*	*	*	*	*	*	*	*												
2517						*	*	*	*	*	*	*	*	*	*	*	*	*	*	*	*	*	*	*										
3020												*	*	*	*	*	*	*	*	*	*	*	*	*	*	*	*							
3535																*	*	*	*	*	*	*	*	*	*	*	*	*	*	*				
4040																		*	*	*	*	*	*	*	*	*	*	*	*	*	*	*		

1) Refer to bush manufacturers for recommended torque capacity of each bush.

SAMIFLEX SPACER COUPLING - TYPE DO

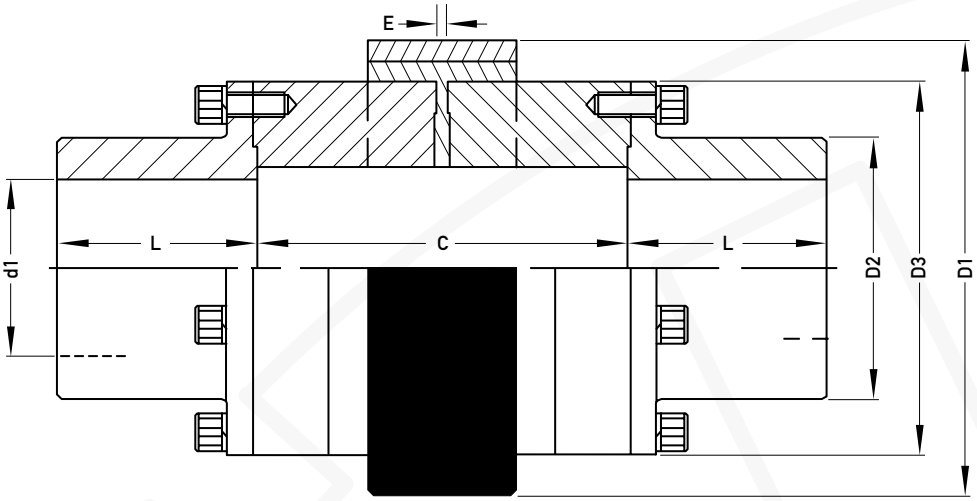

Coupling Size	Maximum KW per 1000 RPM STD Insert	Max Bore (d1)	Max RPM	Dimensions				
				D1	D2	D3	L	C (D.B.S.E.)
A2D	26	42	4100	111	60	86	60	100 120 140
A3D	52	60	4100	144	88	116	70	100 120 140 180
A4D	104	80	3600	182	110	150	85	120 140 180
A45D	184	90	3100	202	125	170	95	120 140 180

Note - The Samiflex Drop Out Spacer (Type DO) is interchangeable with many competitive Drop-out couplings - Consult Autogard

SAMIFLEX SPACER COUPLING - TYPE SP

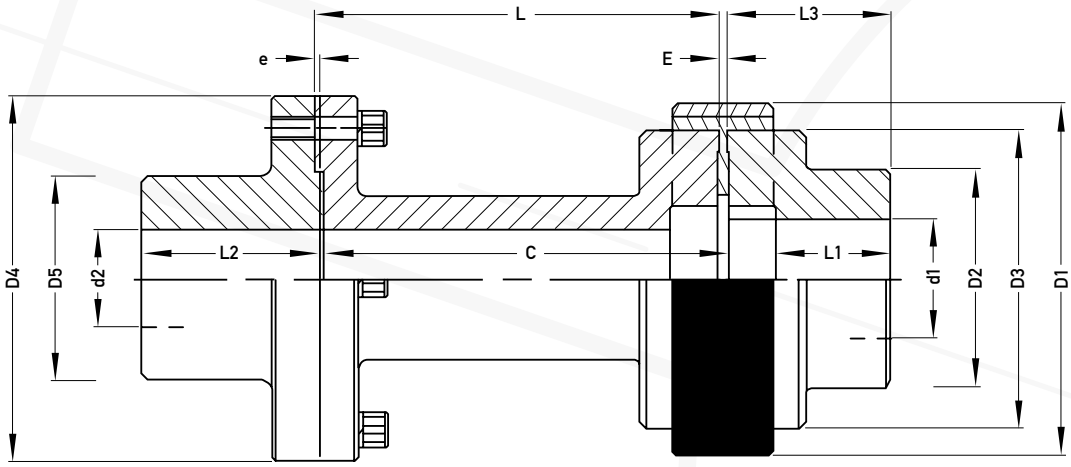

Coupling Size	Max Range		Max RPM	Dimensions								
	d1	d2		D1	D3	D4	D5	L1	L2	L3	e	C (DBSE)
A1-SP	38	42	5500	83	65	100	67	34	45	45	2	100 120 140
A2-SP	42	48	5000	111	86	120	83	47	62	62	2	100 120 140
A3B-SP	55	65	4500	144	116	140	107	56	76	76	2.5	100 120 140
A4B-SP	75	85	3500	182	150	178	140	63	88	88	2.5	120 140 180
A45-SP	75	90	3100	202	170	200	150	70	97	97	2.5	120 140 180
A5B-SP	95	110	2900	225	190	225	179	77	106	106	2.5	140 180 200
A55-SP	95	110	2600	250	215	245	180	90	121	121	3	140 180 200
A6-SP	110	120	2500	265	233	265	198	95	128	128	3	180 200 250
A7-SP	130	130	2200	306	267	290	230	116	153	153	3	200 250 280

1) L = C - 1
2) Refer to Page 4 for dimensions D2 and E.

SAMIFLEX LIMITED END FLOAT COUPLING - TYPE FX

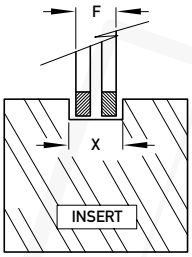

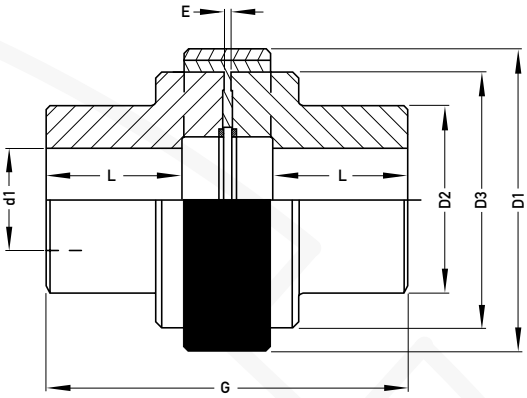

Coupling Size	Max Bore (d1)	Dimensions									Axial Float
		D1	D2	D3	D.B.S.E.	E	G	L	F	X	
A4B FX	95.2	182	135	150	54	3.5	180	63	11.5	12.5	1
A4.5 FX	82.5	202	125	170	58	3.5	198	70	11.5	12.5	1
A5B FX	114.3	225	160	190	62	3.5	216	77	14.5	16	1.5
A55 FX	101.6	250	155	215	66	3.5	246	90	14.5	16	1.5
A6 FX	114.3	265	180	233	70	3.5	260	95	18.5	20.5	2
A7 FX	139.7	306	205	267	78	4	310	116	18.5	20.5	2
A8 FX	150	363	242	326	88	5	382	147	21	24	3
A9 FX	180	425	280	385	96	5	420	162	21	24	3
A10 FX	210	523	330	483	106	6	482	188	22	26	4

SAMIFLEX COUPLING FOR SAE FLYWHEEL ARRANGEMENTS

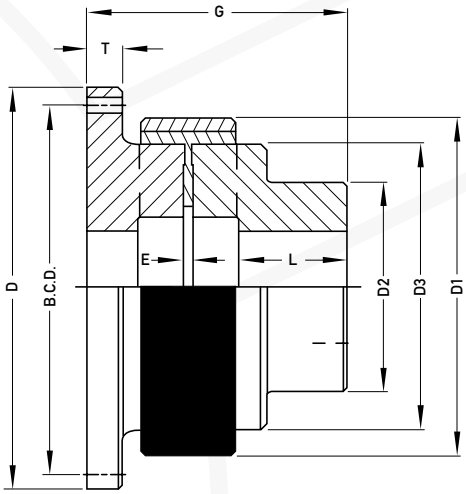

Coupling Size	Max Bore	SAE J620 Number	Dimensions						
			D1	D2	D3	E	G	L	T
A2 EB-SAE	54.0	6-1/2", 7-1/2", 8"	111	80	86	2.5	100	46	12
A3B EB-SAE	69.8	7-1/2", 8", 10"	144	105	116	2.5	124	56	15
A4B EB-SAE	95.2	8", 10", 11-1/2"	182	135	150	3.5	144	63	17
A5B EB-SAE	114.3	10", 11-1/2", 14"	225	160	190	3.5	168	76	20
A6 EB-SAE	114.3	11-1/2", 14", 16"	265	180	234	3.5	196	94	22
A7 EB-SAE	139.7	14", 16", 18"	306	205	267	4	229	115	25
A8 EB-SAE	150	16", 18", 21"	363	240	326	5	280	146	30

1) For standard flywheel dimensions (D, B.C.D. and hole sizes) - Consult Autogard
2) Flywheels are available in non-standard sizes - Consult Autogard.